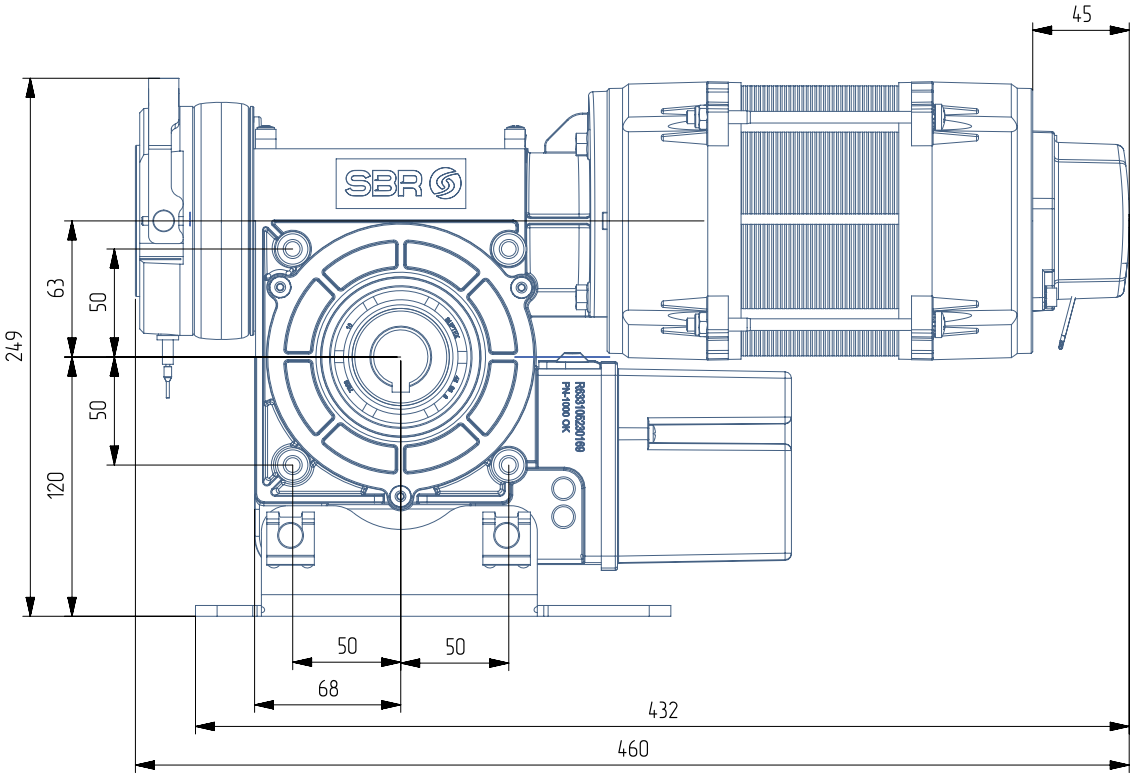

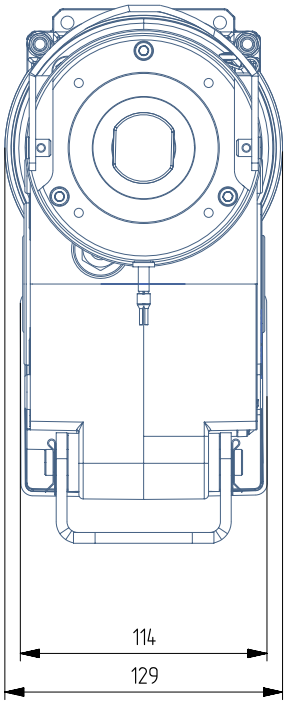

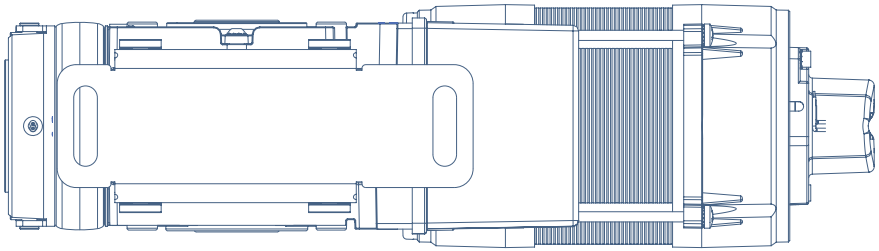

	Date	Name	Tolerance	Format	Material	Weight
Desing	04-Jul-2024	Can Kocaman	DIN7168-M	A-4		
Approval	04-Jul-2024	A.MUSTU				

Description

PS-063-0080-090-D25.0-M20-1.10KW-3N400-M1-R2 HIZLI KAPI MOTORU

www.sbr.com.tr

SBR ENGINEERING

Part Number: 5043041406

REV: R00