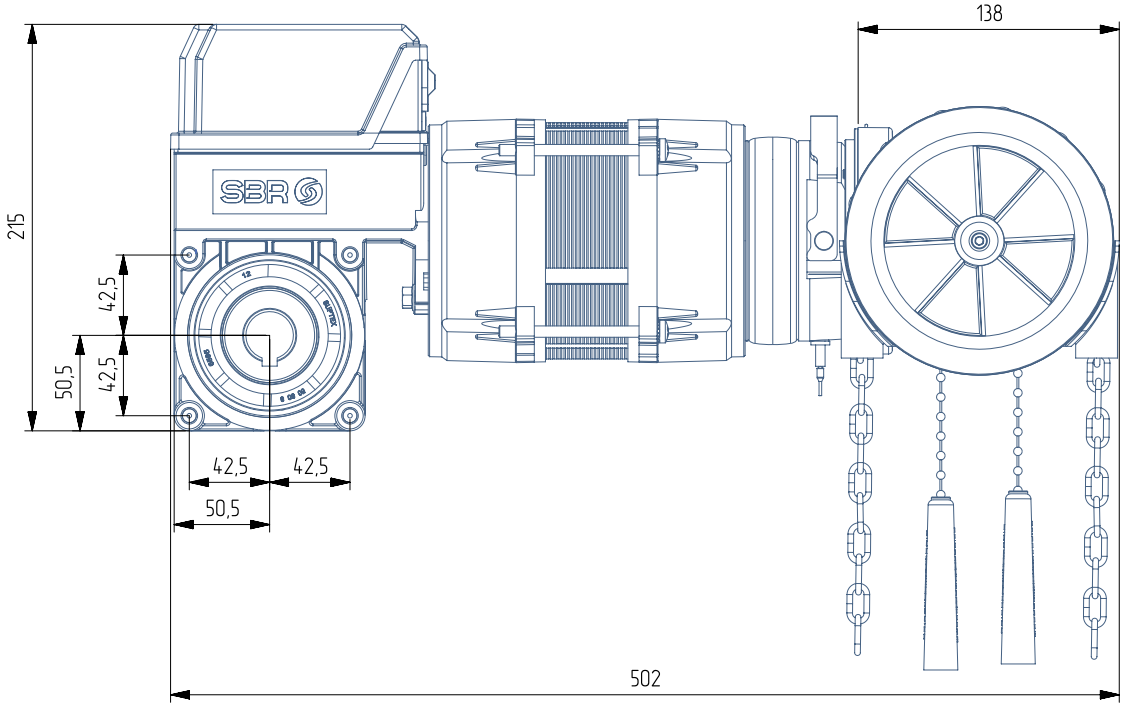

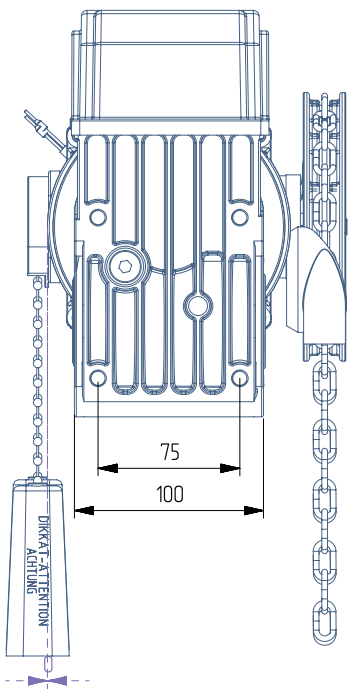

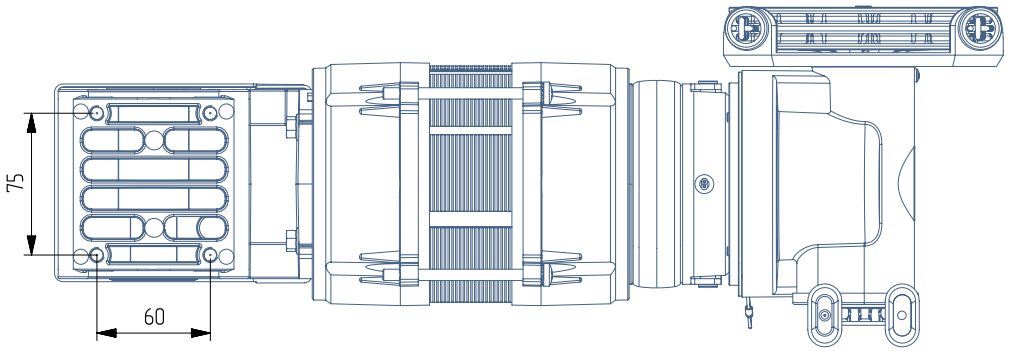

	Date	Name	Tolerance	Format	Material	Weight
Desing	14-Oct-2024	Can Kocaman	DIN7168-M	A-4		
Approval	14-Oct-2024	A.MUSTU				

Description: PS-050-0060-095-D25.0-E20-0.75KW-3N400-C2-B2 HIZLI KAPI MOTORU

www.sbr.com.tr

SBR ENGINEERING

Part Number: 5042031501

REV: R00