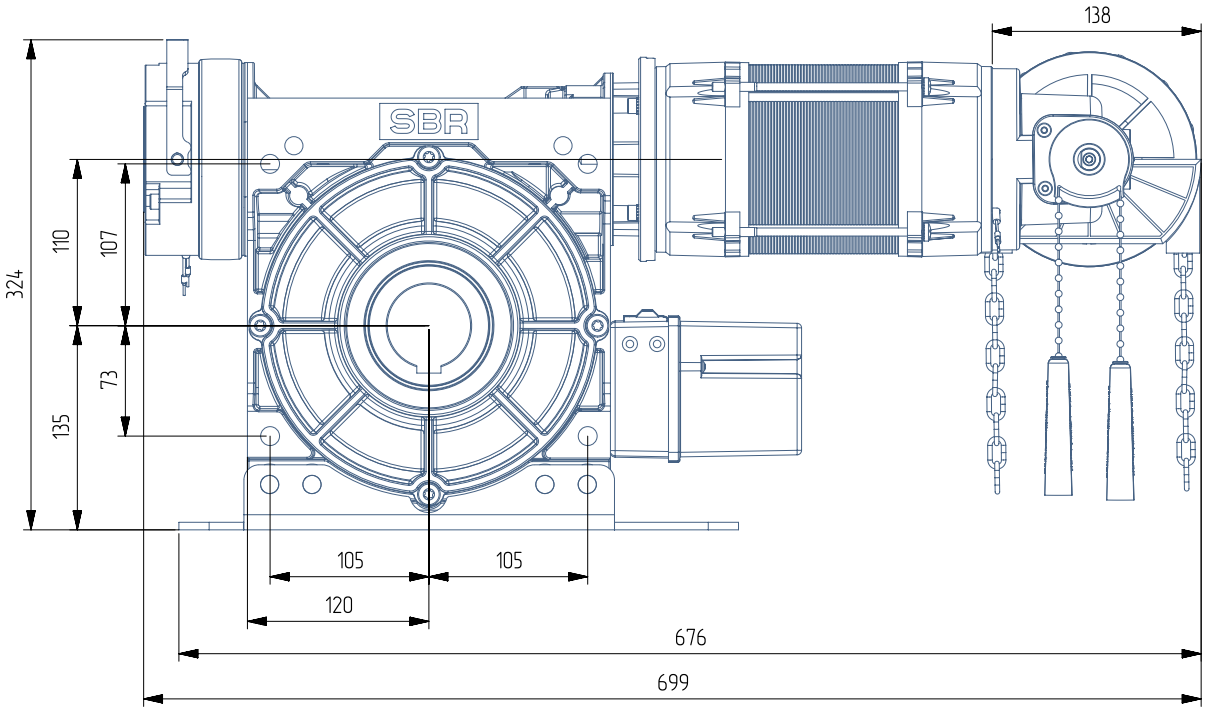

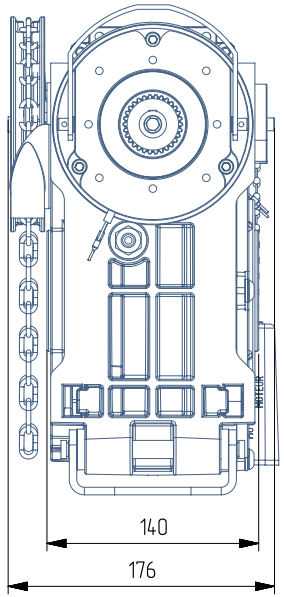

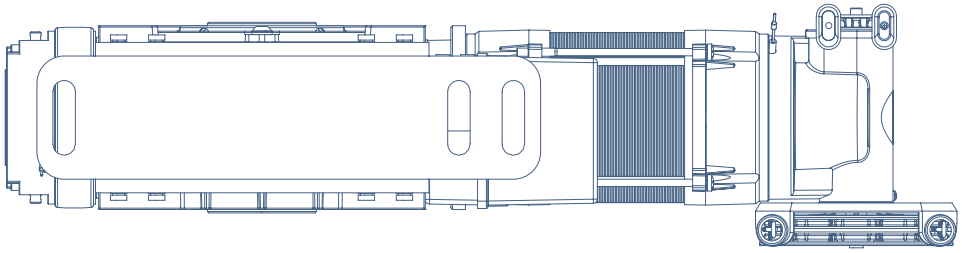

	Date	Name	Tolerance	Format	Material	Weight
Desing	18-Feb-2025	Can Kocaman	DIN7168-M	A-4		
Approval	18-Feb-2025	A.MUSTU				

Description

RD-110-1500-007-D55.0-E20-110KW-3N400-C3-R3 KEPENK PANJUR MOTORU

www.sbr.com.tr

SBR ENGINEERING

Part Number: 5035270101

REV: R00