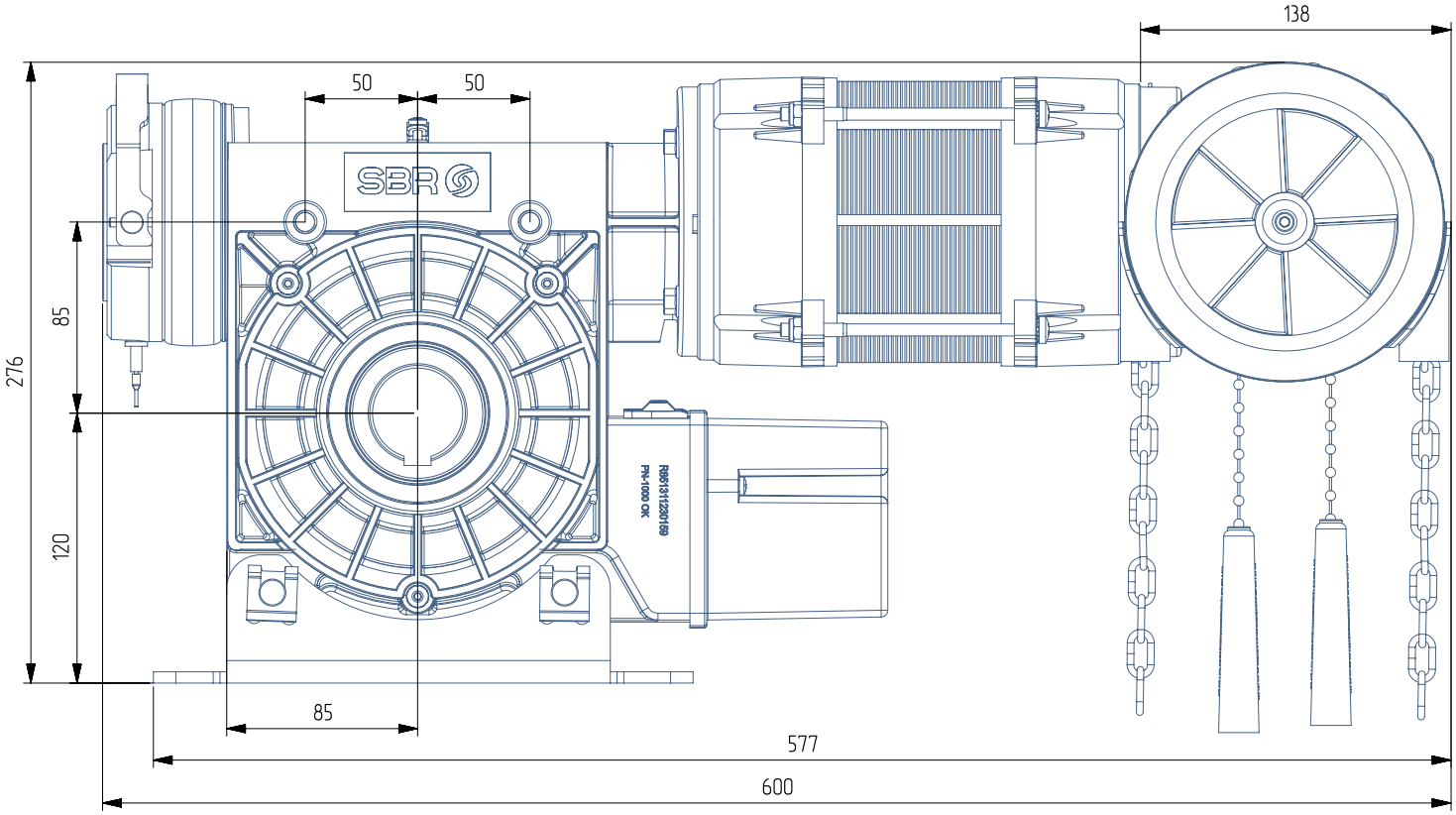

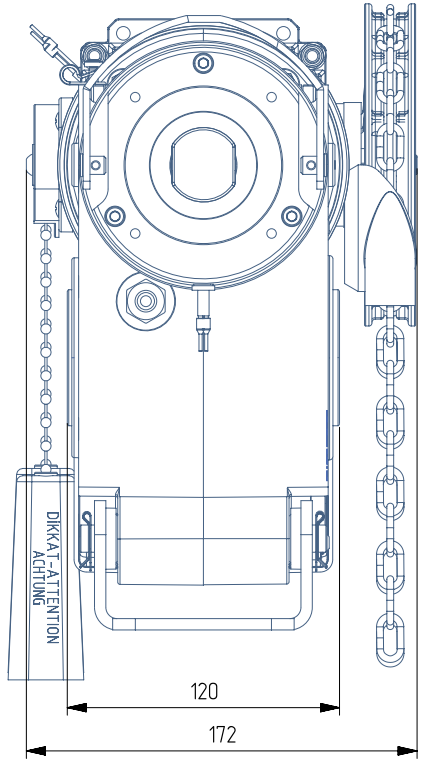

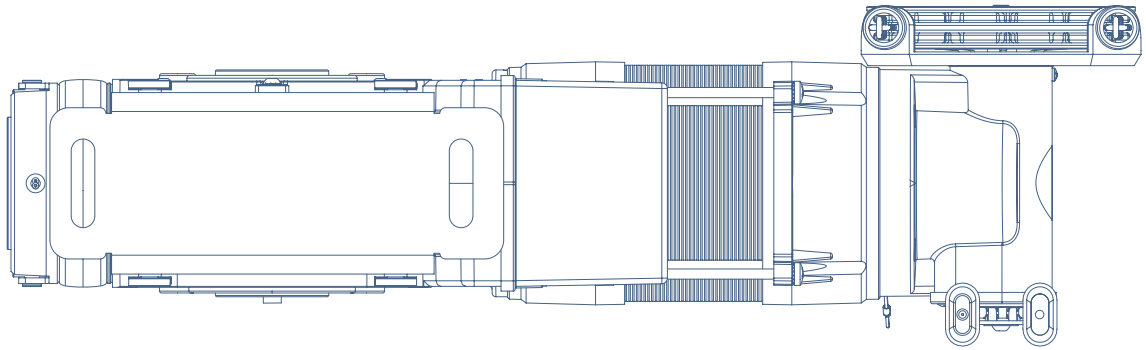

	Date	Name	Tolerance	Format	Material	Weight
Desing	04-Jul-2024	Can Kocaman	DIN7168-M	A-4		
Approval	04-Jul-2024	A.MUSTU				

Description: RD-085-0400-015-D40.0-E20-1.10KW-3N400-C2-R2 KEPENK PANJUR MOTORU

www.sbr.com.tr

SBR ENGINEERING

Part Number: 5034200503

REV: R00