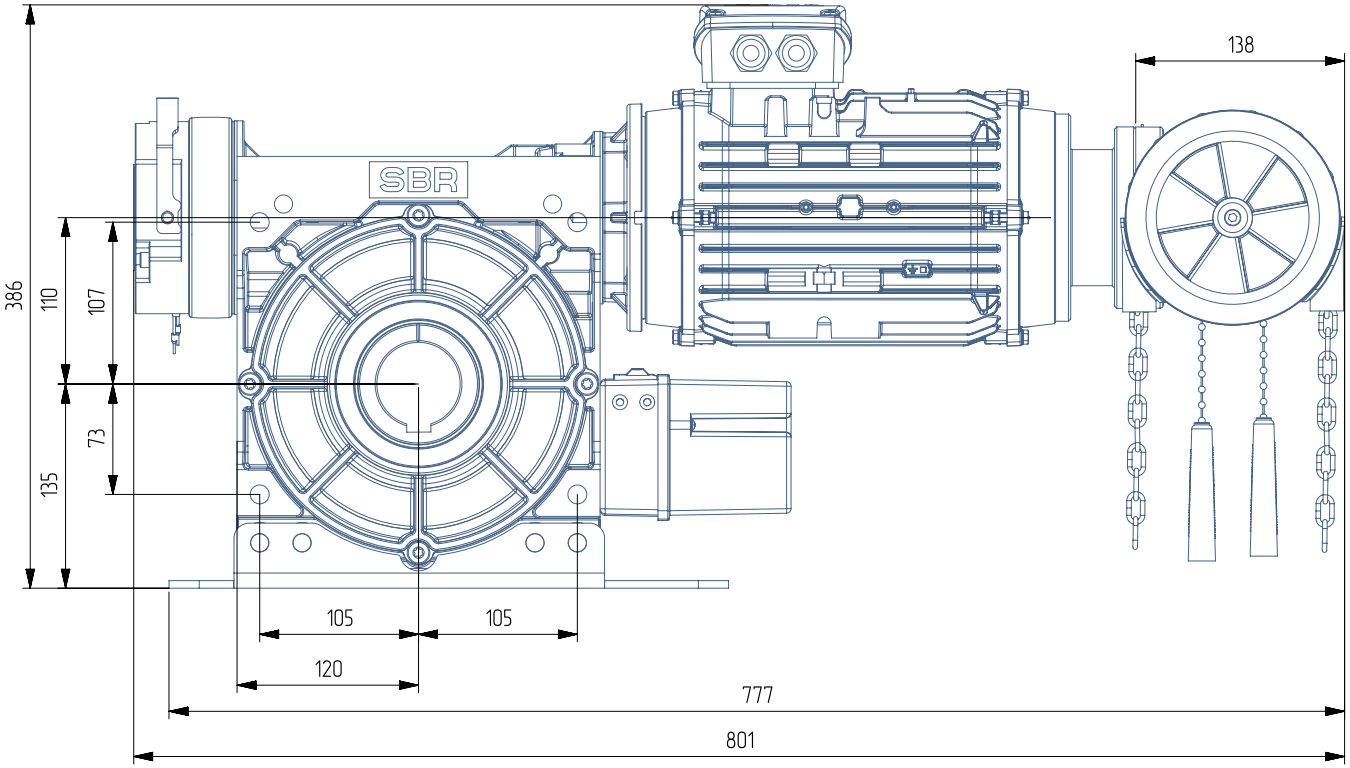

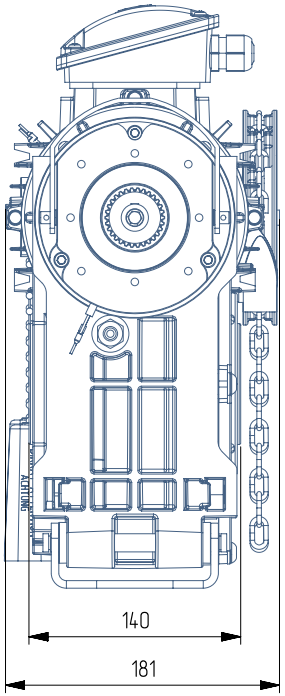

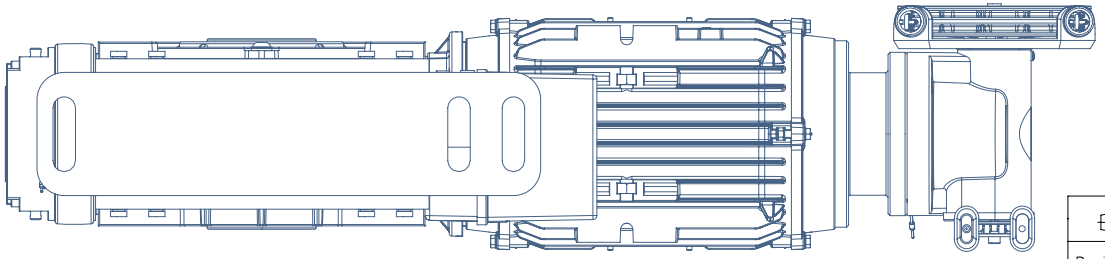

	Date	Name	Tolerance	Format	Material	Weight
Desing	18-Feb-2025	Can Kocaman	DIN7168-M	A-4		
Approval	18-Feb-2025	A.MUSTU				

Description

DS-110-0800-024-D55.0-E20-2.20KW-3N400-C3-R3 YAY DENGELEMESIZ SEKSIYONEL KAPI MOTORU

www.sbr.com.tr

SBR ENGINEERING

Part Number: 5025240801

REV: R00