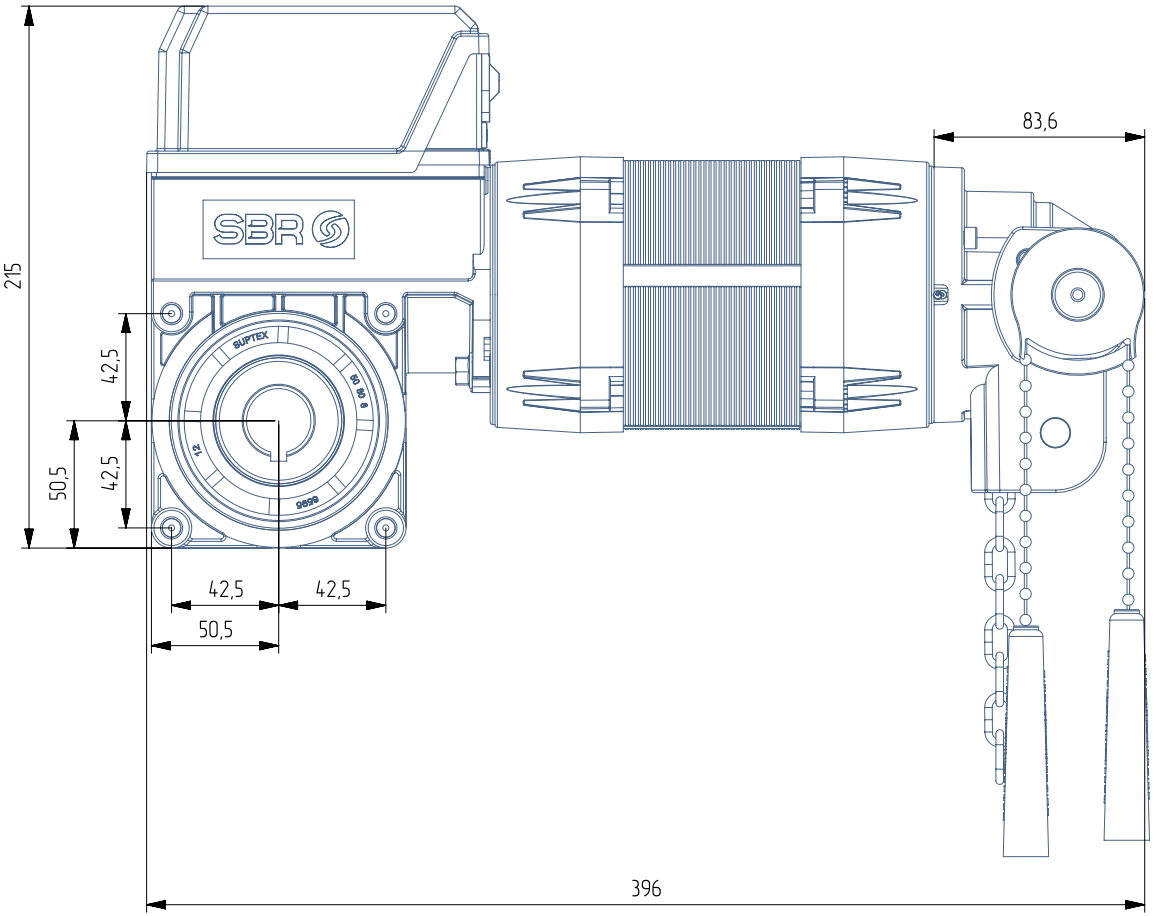

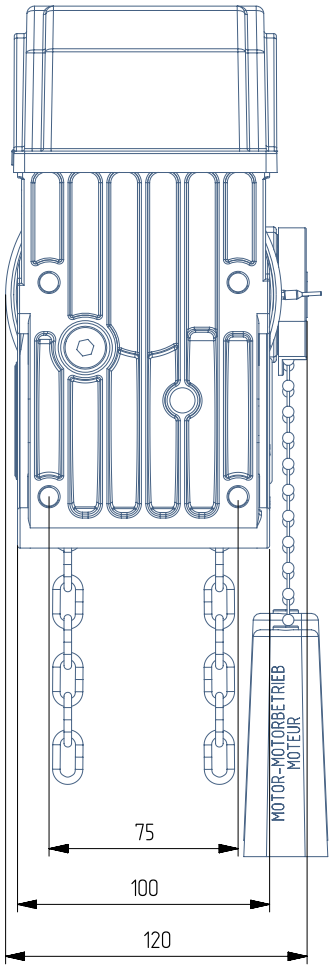

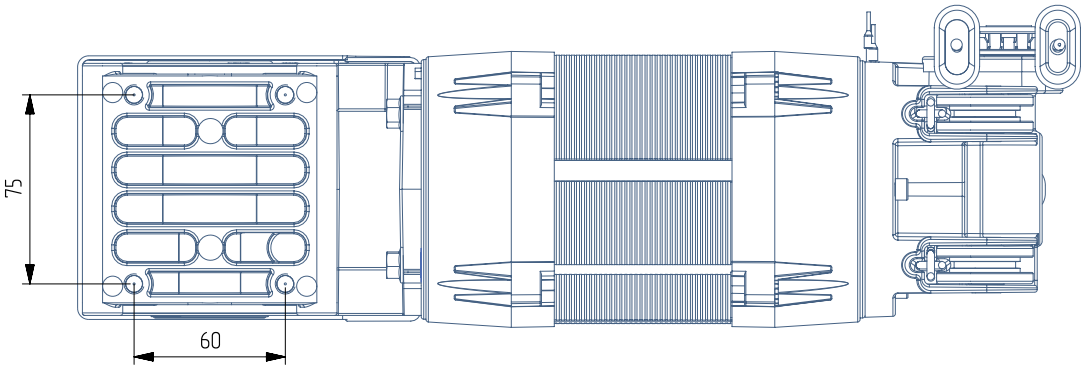

	Date	Name	Tolerance	Format	Material	Weight
Desing	14-Nov-2024	Can Kocaman	DIN7168-M	A-4		
Approval	14-Nov-2024	A.MUSTU				

Description: SD-050-0110-024-D254-M20-0.55KW-3N400-C1-B0 SEKSIYONEL KAPI MOTORU

www.sbr.com.tr

SBR ENGINEERING

Part Number: 5012070802

REV: R00