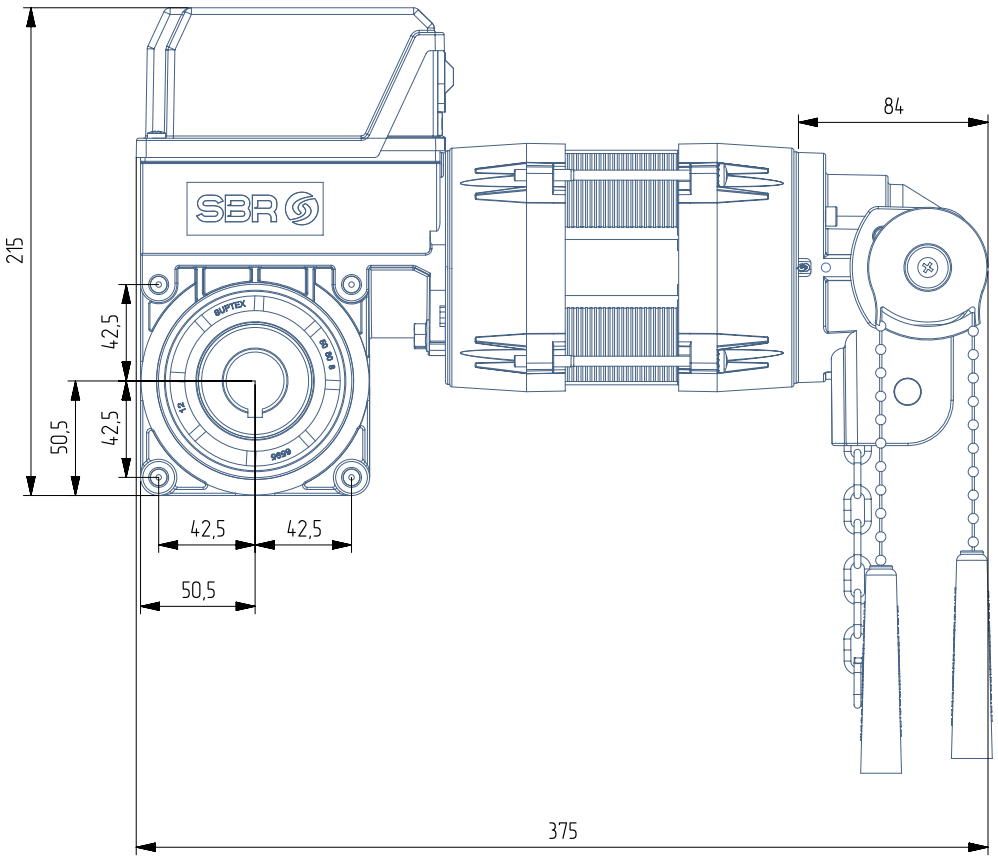


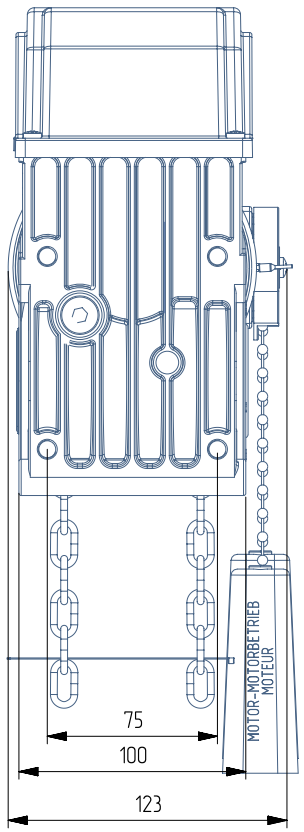


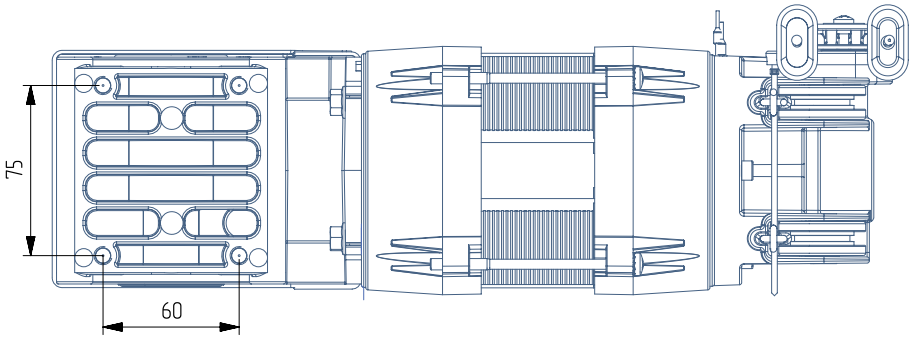


| | Date | Name | Tolerance | Format | Material | Weight |
|---|---|---|---|---|---|---|
| Desing | 14-Oct-2024 | Can Kocaman | DIN7168-M | A-4 | | |
| Approval | 14-Oct-2024 | A.MUSTU | | | | |

Description: SD-050-0100-024-D25.4-E20-0.37KW-3N400-C1-B0 SEKSIYONEL KAPI MOTORU

www.sbr.com.tr

SBR ENGINEERING

Part Number: 5012060801

REV: R00